Datasheet

PAS-NPS102A | Network Audio Paging Station with 7" Touch Screen



Key features

- 7-inch high-definition capacitive touch screen with 800×1280 resolution for clear operation and status viewing.
- Built-in digital audio processor enabling full duplex, hands-free intercom with high-fidelity audio.
- Supports file, pre-recorded, and TTS broadcasting to specific zones or terminals.
- Standard SIP compatibility for integration with mainstream SIP PBX systems and third-party devices.
- Offline intercom capability allowing initiating and receiving calls without a server.
- Multi-party call and remote door release functions with relay I/O for peripherals.

Product Overview

Macsys PAS-NPS102A Network Audio Paging Station is a designed for intercom, paging, and control across TCP/IP, SIP, UDP and related protocols. It features a 7-inch capacitive touch screen with 800×1280 resolution and a built-in digital audio processor for full duplex, hands-free communication. The unit supports file, pre-recorded, and TTS broadcasting to zones or terminals, along with customizable ringtones and standard SIP interoperability. It enables offline intercom independent of a server, provides online monitoring and call recording/query functions, and supports multi-party calls with remote door release via relay interfaces. Power, network, audio, relay, and USB ports, plus included accessories and desktop mounting, make deployment straightforward in dry indoor locations.

Technical Specification

Feature	Details
Display	7 inch(1280*800); capacitive touch screen;
Audio processing	Built-in digital audio processor for full duplex and hands-free audio intercom.
Audio codec support	MP3, PCM, ADPCM
Sampling/bit rate	8kHz~44.1kHz, 16bit, 8kbps~320kbps
Built-in speaker	1.5W ,4Ω
S/N ratio	>82dB
Frequency response	40Hz-18KHz
Camera	2 million pixels
Network interface	10BASE-T/100BASE-TX RJ45
Network protocols	TCP/IP,UDP,ARP,ICMP,IGMP,HTTP,SIP
Configuration methods	Web Interface or DevConfig Tool
Power input	DC12V ,1.5A
Standby power consumption	≤10W
CPU	4-core ARM
RAM	1G
Storage	4G
Mounting	Desktop
Installation environment	Dry Indoor Locations Only
Operating temperature	0°C~+45°C (32°F~113°F)
Operating humidity	≤90% RH non-condensing
Front panel material	Steel
Housing material	ABS
Color	Black
Dimensions	183.9x169.0x58.4mm
Weight	0.75KG
Accessories included	1×Quick Installation Guide; 1×Terminal Blocks(3.55P); 1×Power Adaptor(DC24V/1A); 1×Certificate and warranty card; 1×Microphone Rods

Feature	Details
Ports overview	Power Input Port; Network Port; Audio Input Port; Audio Output Port; Relay Input Port; Relay Output Port; USB Port
Relay I/O use cases	Connect emergency button (input); strobe light, buzzer (output)
External audio connections	To mobile phone or laptop, etc.; active speaker or amplifier
Broadcasting modes	Supports file, pre-recorded, and TTS broadcasting to specific zones or terminals.
Offline calling	Enables initiating and receiving offline calls independently of a server.
SIP interoperability	Compatible with standard SIP protocol for easy integration with mainstream SIP PBX systems
Ringtone customization	Customizable ringtones for incoming calls and broadcasts.
Monitoring	Online monitoring of other terminals' working status, aiding in debugging and maintenance.
Call logs	Features for recording, tracking, and querying incoming and outgoing calls.
Certification	CE, RoHS Compliance

Dimension

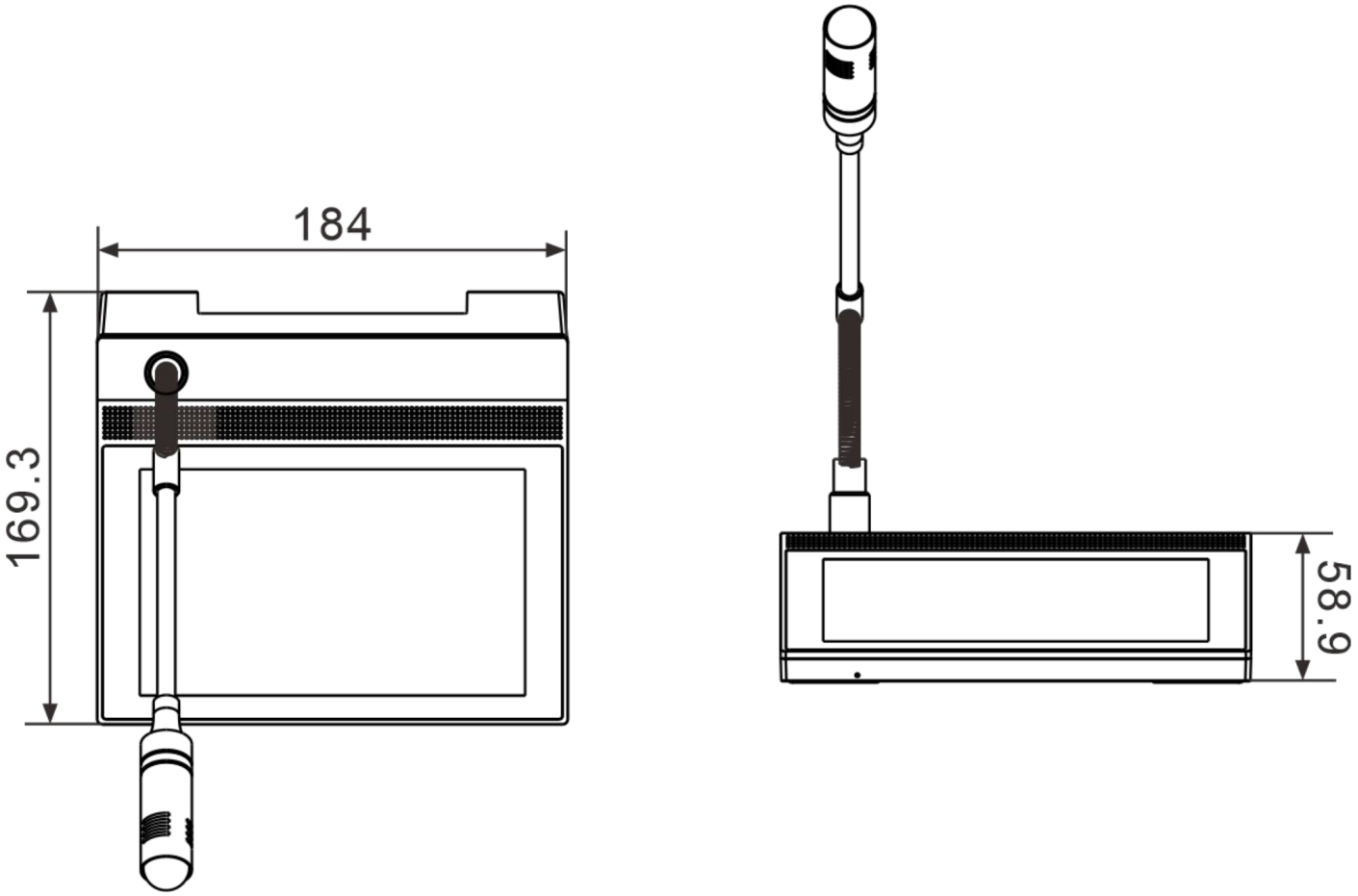

©2024 Macsys

Macsys reserve rights to introduce modifications without notice. Product images are for illustrative purposes only, the actual product may vary. Warranty policy applies as described on our website.