Datasheet

PAS-NPC104V | Network Video Paging Console



Key features

- 10.2" touch display with 13MP HD camera for two-way video intercom and face recognition.
- Flexible paging, file/pre-recorded broadcasting, and red button for all-zone emergency PA.
- SIP-compatible with third-party PBXs (Cisco, Asterisk, Yealink) via SIP trunk or standalone.
- Built-in 3W speaker, condenser mic, Bluetooth, supports hands-free/gooseneck microphone.
- Relay I/O for emergency devices, alarms, electronic locks, and remote unlocking signals.
- Network monitoring, electronic map for real-time endpoint status and quick calling.

Product Overview

The Macsys PAS-NPC104V Network Video Paging Console is a designed for secure and efficient communication. Equipped with a 10.2-inch capacitive touch display and a 13MP HD camera, it enables two-way video intercom with intelligent face recognition. The console supports flexible paging, pre-recorded and file broadcasting to selected zones or terminals, with a dedicated emergency button for instant all-zone announcements. Built on SIP protocol, it integrates seamlessly with third-party PBXs for both trunk-based and standalone registrations. Connectivity options include RJ45 (PoE IEEE802.3af), HDMI, USB2.0/3.0, and Bluetooth, with configuration via Web Interface or Config Tool. Relay I/O allows integration with alarms, detectors, emergency triggers, and electronic locks for enhanced security, while real-time monitoring through network state checks and electronic map visualization ensures fast response.

Technical Specification

Feature	Details
Touch display	10.2 inch(1280*800); capacitive touch screen
Camera resolution	13 mega pixels
Camera sensor	1/2.9", CMOS
Camera aperture & focal length	F2.2 , 3.69mm
Camera frame rate	25fps
Camera viewing angle (H/V)	74.9°
Two-way video intercom	13MP HD camera for two-way video intercom
Face recognition	Intelligent face recognition for enhanced security
Audio codecs	MP2, MP3, PCM, ADPCM
Audio sampling & bit rate	8kHz~48kHz, 16bit/32bit, 8kbps~320kbps
Built-in speaker	3W ,4Ω
Microphone type	Condenser
SNR & frequency response	>85dB . 25Hz~20KHz
Video bit rate	512Kbps-4Mbps
Connectivity	10BASE-T/100BASE-TX RJ45
Network protocols	TCP/IP, UDP, ARP, ICMP, IGMP, SIP, HTTP, RTP
Configuration methods	Web Interface or Config Tool
Power supply	DC12V/3.3A , POE(IEEE802.3af)
Standby power consumption	≤20W
Bluetooth	Bluetooth connectivity for intercom options
Intercom modes	Dial, Bookmarks, and Map
Paging & broadcast	Flexible paging broadcasting across different zones; Pre-recording and file broadcasting to specified terminals
Emergency broadcast	Red emergency button to initiate all zones emergency broadcasting
Conference support	Full audio/video conference support
SIP integration	SIP protocol compatibility; initiate & receive sip calling with the third-party SIP PBX via SIP trunk; independently registered to SiP PBX
External I/O	Relay Input/Output for emergency buttons, detectors, alarms, electronic locks
Remote unlocking	Give a unlock-door signal to front-end device to realize remote unlocking
Electronic map	Display front endpoints in real time; quick call via map
Network monitoring	Network state checks for each system terminal

PAS-NPC104V | Network Video Paging Console

Feature	Details
HDMI	HDMI Output
USB	USB2.0/3.0
Intercom options	Built-in 3W speaker, unidirectional microphone, Bluetooth; hands-free and gooseneck microphone use
Accessories	1×Mic Rods, 1×Handset; 1×Telephone Linecord; 1×Quick Installation Guide; 1×Power Adaptor(DC12V/3.3A)
Mounting options	Professional, versatile console supporting various installations (desktop, embedded, wall-mounted)
Installation format	Desktop
Install environment	Dry Indoor Locations Only
Operating temperature	-10°C~+50°C (14°F~122°F)
Operating humidity	≤90% RH non-condensing
Front panel & Housing material	Plastic
Color	Black
Dimensions	337x211x32.7mm
Weight	1.65KG
Certification	CE, RoHS Compliance

Dimension

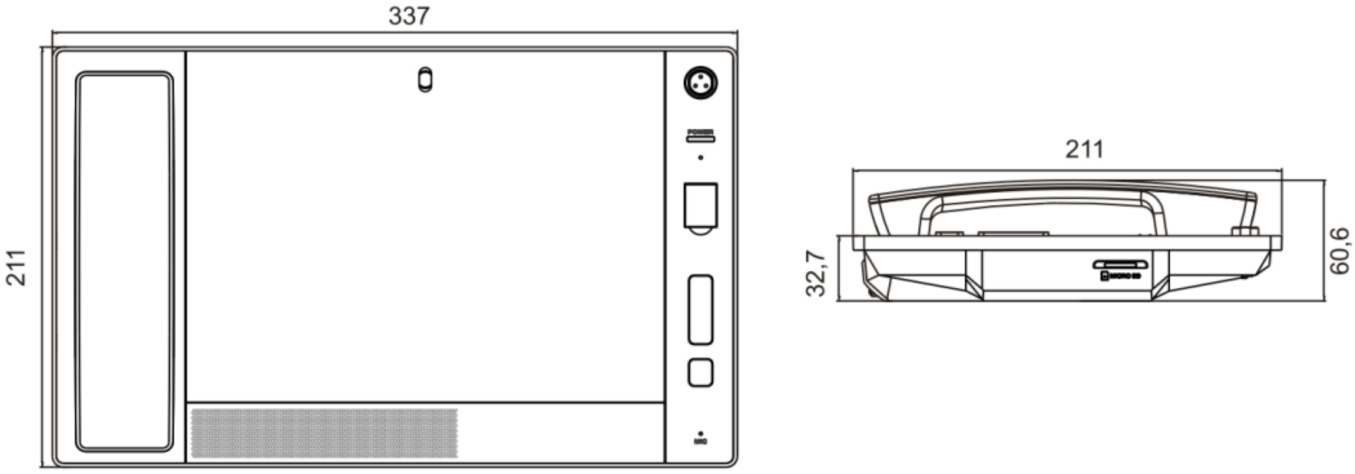

©2024 Macsys

Macsys reserve rights to introduce modifications without notice. Product images are for illustrative purposes only, the actual product may vary. Warranty policy applies as described on our website.