Datasheet

PAS-NPAA15 | Network PoE Audio Adaptor



Key features

- PoE-powered network audio interface with support for SIP/VMS calls
- Multicast streaming up to 20 streams.
- Built-in storage supports up to 20 audio files with a total capacity of 80 MB,
- Compatible with WAV and MP3 formats.
- Supports multiple playback modes including scheduled playback, repeat, and interval playback for flexible announcements.
- Compatible with standard audio protocols such as SIP, ONVIF, and multicast, enabling seamless integration.
- Remote control and management via network with HTTP API triggers for event-based audio playback.
- One built-in audio output channel designed for integration with traditional analog systems via IP network

Product Overview

The PAS-NPAA15 is a PoE-powered Network PoE Audio Adaptor designed for advanced audio applications in IP network environments. It supports SIP and VMS calls along with up to 20 multicast audio streams, making it ideal for real-time remote audio transmission. The device features local storage for up to 20 audio files (80MB total) and supports popular audio formats WAV and MP3 with various playback modes such as scheduled and repeat playback. It is compatible with industry standards like SIP, ONVIF, and multicast protocols and can be remotely managed over the network, including HTTP API-triggered playback events. One built-in audio output converts network audio signals into analog output, facilitating easy upgrades to traditional analog broadcasting systems. The product is housed in a durable aluminum alloy casing, designed for indoor wall-mount installation with a compact form factor.

Technical Specification

Feature	Details
Power Source	PoE IEEE802.3af/at
Power Consumption	≤ 3W
Audio Power Output	15W @8Ω
Frequency Range	100 Hz - 20 KHz
Audio Transmission	Multicast, up to 20 editable streams
Supported Audio Codecs	Opus, PCMU G.711u, PCMA G.711a, G.722
Signal-to-Noise Ratio (SNR)	90 dB
Control Input	1
Status Indicator	LED
Speaker Interface	1
Audio Output Level	1,0dB
Audio Storage Capacity	Maximum 20 audio files, 80 MB total
Supported Audio File Formats	WAV, MP3
Network Interface	100 BASE-TX, RJ45 Connector
Network Protocols Supported	TCP/IP, UDP, HTTP, RTP, RTSP, ARP, ICMP, NTP, SIP, ONVIF
Configuration Methods	Web Interface or DevConfig Tool
Installation Method	Wall-mounted
Suitable Installation Environment	Indoor Locations
Operating Temperature Range	-10°C to 50°C
Housing Material	Aluminum Alloy
Device Color	Black
Dimensions (LxWxH)	126 x 66 x 27 mm
Weight	160 g
Accessories	1×wiring Terminal(3.5-6P1),1×wiring Terminal(3.5-4P), 1× Installation Manual
Certification	CE, RoHS Compliance

Dimension

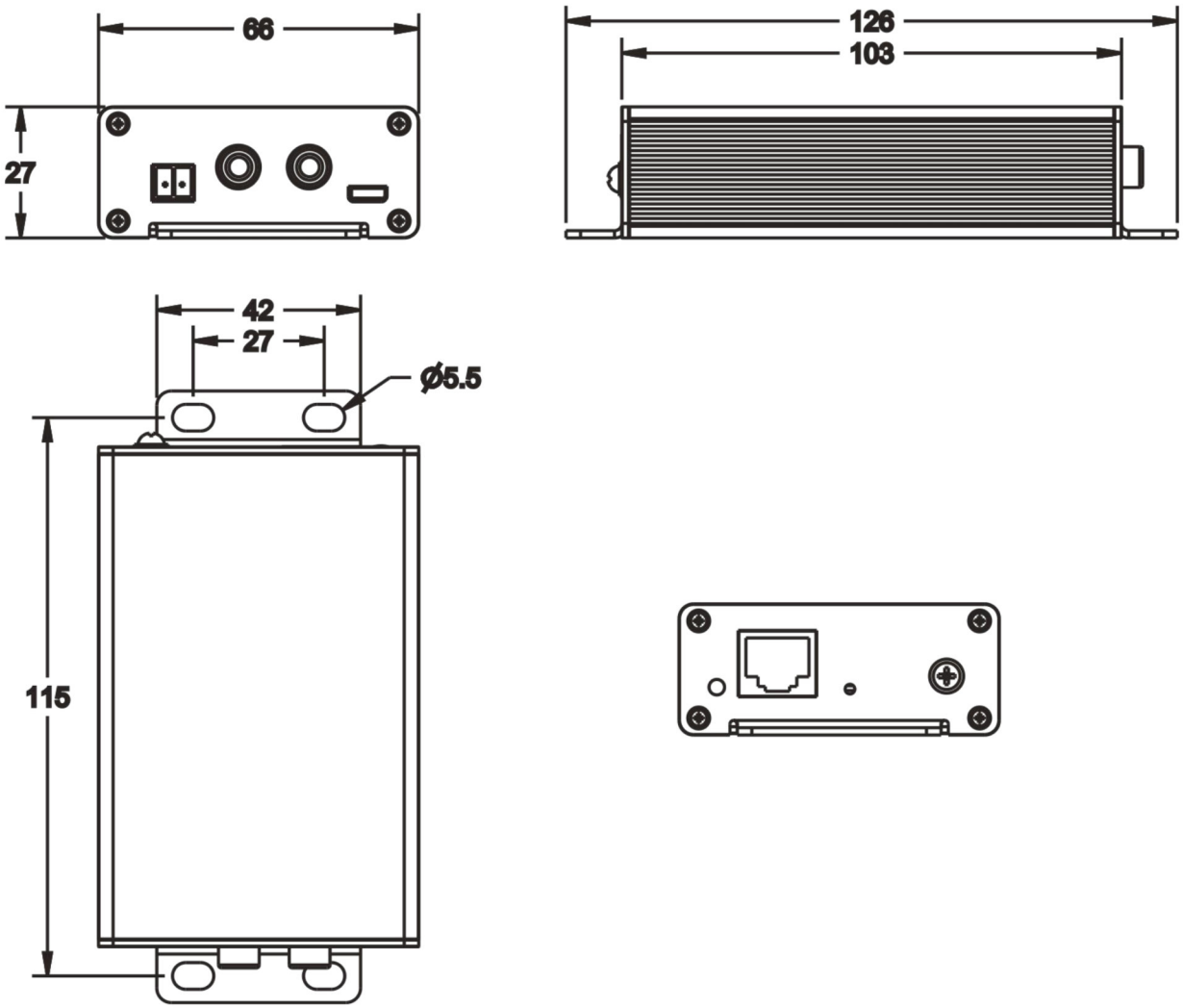

©2024 Macsys

Macsys reserve rights to introduce modifications without notice. Product images are for illustrative purposes only, the actual product may vary. Warranty policy applies as described on our website.