Datasheet

PAS-NHS10 | High-Performance Network PoE Horn Speaker 10 Watt



Key features

- Durable Build: Aluminum alloy housing and stainless steel bracket.
- Powerful Sound: 120dB output via POE for clear communication.
- Waterproof Microphone: High-definition 2-way intercom with dynamic volume adjustment.
- Protocol Support: Compatible with SIP and ONVIF for easy integration.
- Weatherproof: IP66 rating, operational from -40°C to 70°C.
- Flexible Power: Supports POE and POE+, DC 24V.
- I/O: expansion with 2 alarm inputs and 1 alarm output
- Remote Management: Allows for remote control and online upgrades.

Product Overview

The Macsys PAS-NHS10 is an advanced outdoor communication system engineered for reliability and high performance in tough environments. This robust device features a solid aluminum alloy housing with a stainless steel bracket, ensuring durability and resilience. It integrates an amplifier with high-sensitivity speakers capable of producing 120dB of clear sound when powered through POE (Power Over Ethernet), making it ideal for effective communication in noisy or expansive outdoor areas.

The PAS-NHS10 IP PoE Horn Speaker designed for public address and notification, supporting SIP for VoIP systems and multicast paging without SIP registration in multicast mode. It delivers maximum SPL of 120dB with a waterproof microphone enabling high-definition 2-way intercom and dynamic volume adjustment. Built for harsh environments, it features an IP66 aluminum alloy housing with a stainless steel bracket and operates from -40°C to +70°C at ≤90% RH non-condensing. Power options include DC 24V/1A, PoE (IEEE802.3af), and PoE+ (IEEE802.3at), with web or Config configuration and remote self-check, management, and online upgrades. Integration spans SIP PBX systems and ONVIF-compatible third-party monitoring platforms, with relay I/O for emergency buttons, strobe lights, and pre-set alarm playback.

Techinical Specification

Featues	Detail
Device type	IP PoE Horn Speaker
Protocol compatibility	SIP, ONVIF, HTTP, UDP, ARP, ICMP, IGMP
Intercom capability	2-way intercom
Max sound pressure	Max SPL: 120dB
Sensitivity	109dB±3dB (1W, 1m)
Audio codecs	G.711A-law, G.711μ-law, G.722
Sampling & bit rate	8kHz~44.1kHz, 16bit, 8kbps~320kbps
Frequency response	280Hz~12.5kHz
Signal-to-noise ratio	≥85dB
Power input options	DC 24V/1A, PoE (IEEE802.3af), PoE+ (IEEE802.3at)
Standby power	≤3W
Rated output power	10W(MAX:12W)
Network interface	10BASE-T/100BASE-TX RJ45
Setup methods	Web Interface or Config Tool
Ingress protection	IP66
Operating temperature	-40°C~+70°C
Operating humidity	≤90% RH non-condensing
Installation method	Wall-mounted or Pole
Installation environment	Outdoor Locations
Enclosure material	Aluminum Alloy
Bracket material	Stainless Steel
Color	Off-White
Dimensions	233*173*281mm
Weight	1.6KG
Warranty	2 Years Limited
Power input port	Power Input Port (DC24V/1A)
Audio input port	Reserved

Techinical Specification

Featues	Detail
Alarm input	2 Alarm Input Port
Alarm output	Alarm Output Port
Network port	Network Port
Accessories included	1×2-Pin Pluggable Terminal Block Connector; 1×4-Pin Pluggable Terminal Block Connector; 1×6-Pin Pluggable Terminal Block Connector;
ONVIF platform use	3-rd party monitoring system
Multicast paging	Multicast address and priority can be set on its webpage; No SIP registration required for speakers in a multicast
Remote features	Remote Self-Check; Remote management; Online upgrades
Microphone	Waterproof microphone with dynamic volume adjustment
Housing	Aluminum alloy housing with stainless steel bracket
Certifications	CE, RoHS compliance

Dimension

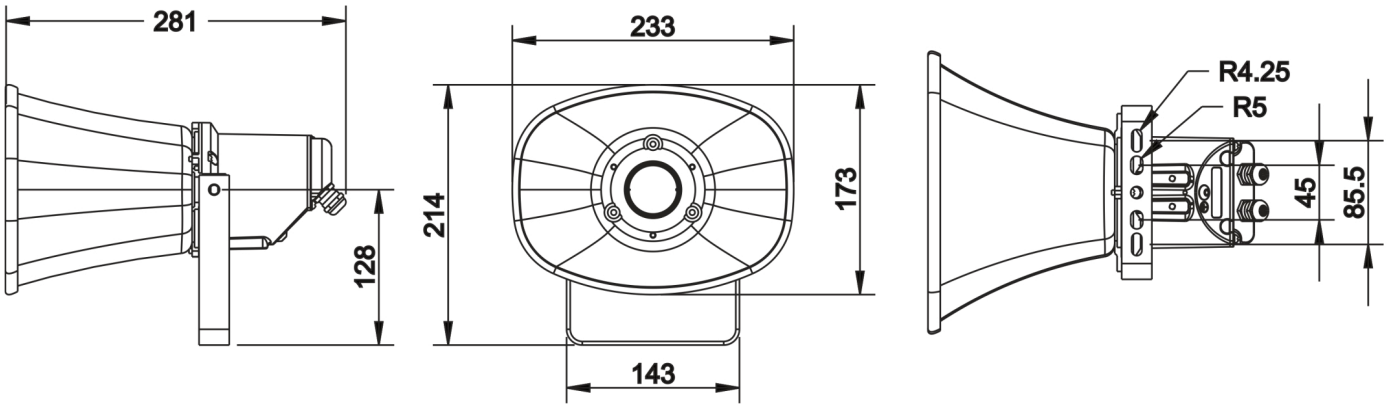

©2024 Macsys

Macsys reserve rights to introduce modifications without notice. Product images are for illustrative purposes only, the actual product may vary. Warranty policy applies as described on our website.